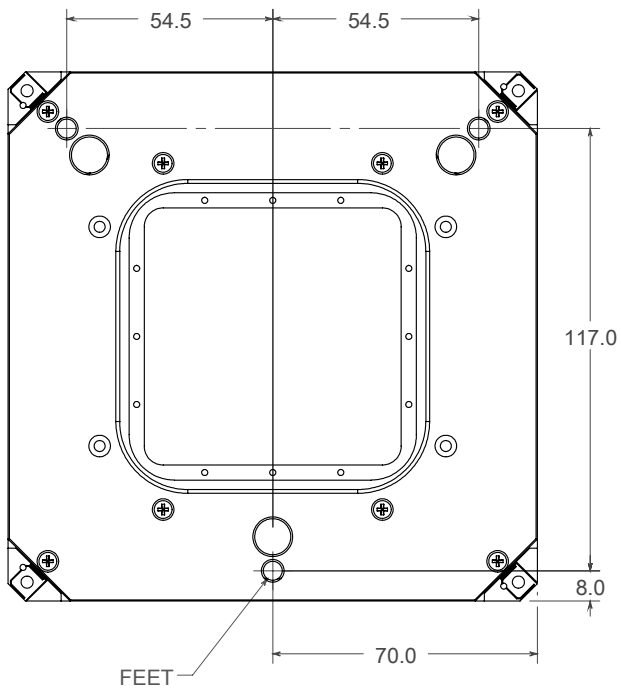

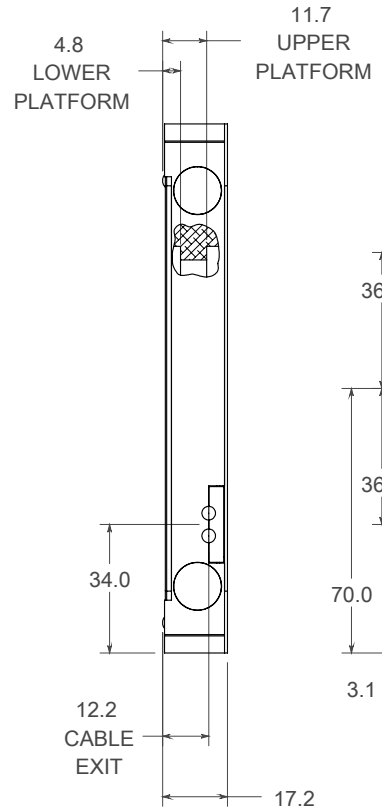

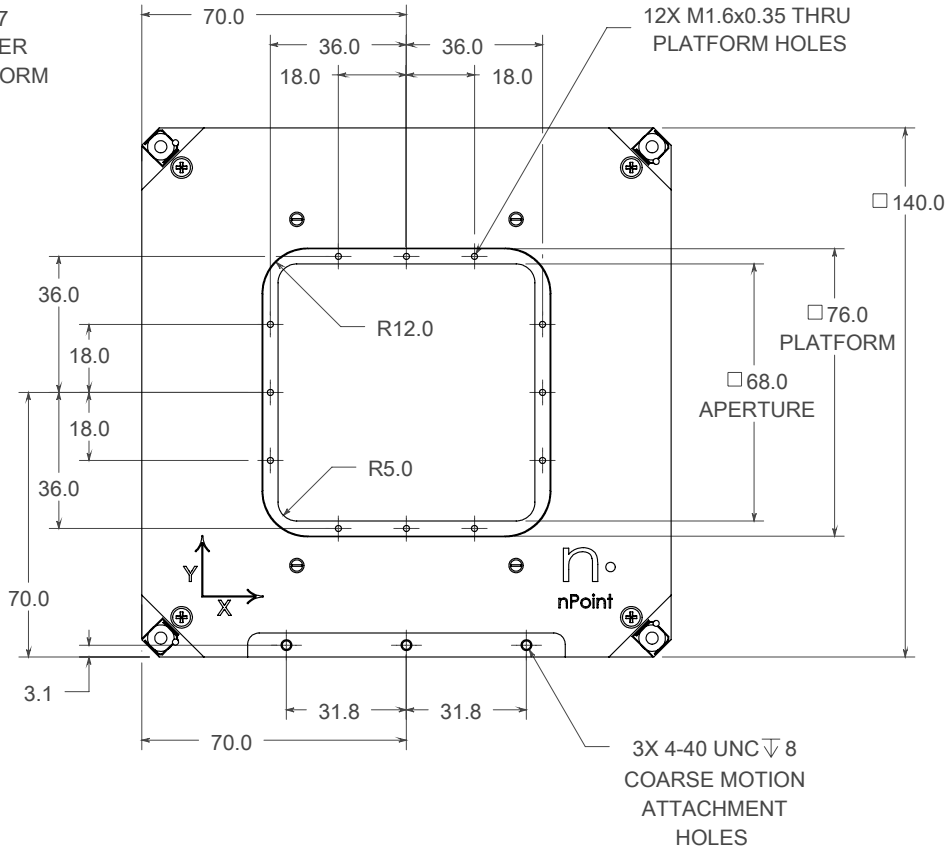

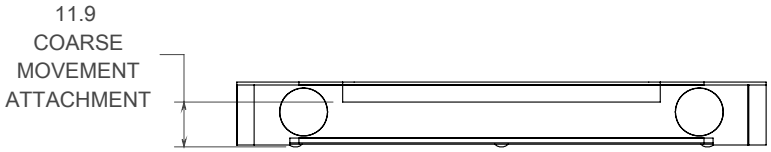

UNLESS OTHERWISE NOTED, ALL UNITS ARE IN MILLIMETERS

THIRD ANGLE PROJECTION

3030 Laura Ln., #100
Middleton, WI 53562

Phone: (608) 824-1770
Fax: (608) 824-1774
www.npoint.com

DESCRIPTION
NPXY150A
2-AXIS SCANNER - 150um
68mm APERTURE

NUMBER	REV.	
3715131	A	SHEET 1 OF 1